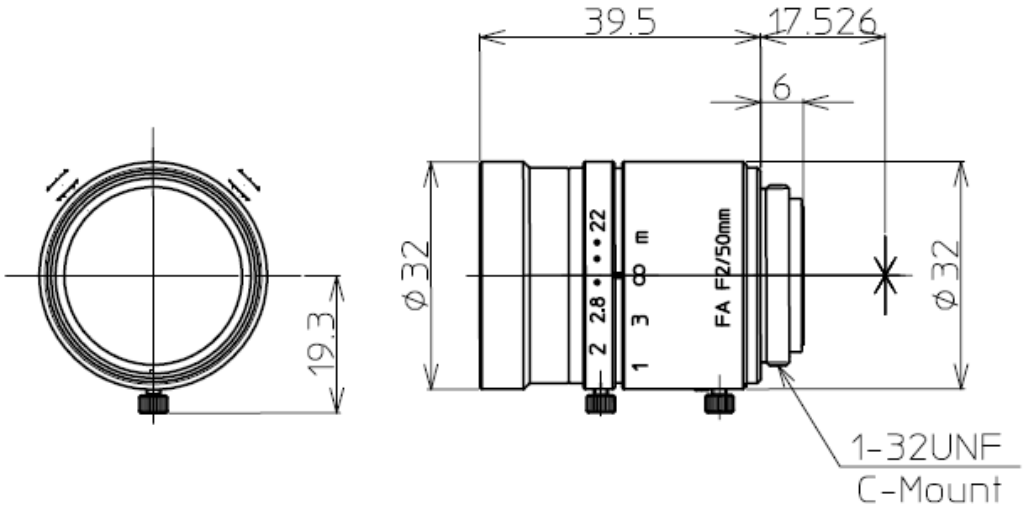

2/3" 2.0/50mm C		1/2"	1/3"
FOCAL LENGTH	f=50mm		
MAX. DIAMETER (RATIO)	F=1:2.0~22		
ELEMENT	5Gr 6 Element		
PICTURE SIZE	6.6x8.8mm	4.8x6.4	4.8x3.6
ANGLE VER. ANGLE	7.6°	5.5°	4.1°
HOR. ANGLE	10.1°	7.3°	5.5°
DIA. ANGLE	12.6°	9.2°	6.9°
DISTORTION	-0.16%	-0.12%	-0.09%
SHOOTING RANGE AT VER.	63.6 mm	46.2	34.6
MINIMUM FOCUS HOR.	85.0 mm	61.7	46.2
DISTANCE DIA.	106.6mm	77.2	57.8
MINIMUM FOCUS DISTANCE	0.5m		
FLANGE BACK	17.526 mm in air		
BACK FOCUS	17.2mm in air		
FILTER SCREW SIZE	M30.5x0.5		
FRONT/REAR EFFECTIVE DIA.	Front Ø24.6mm Rear Ø15.4mm		
MOUNT	C-MOUNT		
EXIT PUPIL	-42.0mm		
TEMPERATURE RANGE	-10~+45° C		
STORAGE TEMPERATURE RANGE	-40~+60° C		
RESOLUTION CENTER/CORNER	Center 100LP/mm Corner 60LP/mm		

		LM50JC		
		2/3" F2 50mm		