SPACECOM CCTV LENSES

HZ848M mold

【SPECIFICATIONS】 F1.0 Manual Zoom Lens

Image Size: 1/2 1/3

Focal Length :	8～48mm
Maximum Relative Aperture :	1:1.0
Iris :	F1.0～Close
Zoom Ratio :	6X
Angle of View :	43.6×33.4 deg. at 8mm 7.7×5.7 deg. at 48mm
Image Size :	6.4×4.8mm（φ8mm）
Minimum Object Distance :	1.0m（From Front Vertex） Close-up photography as far as Object Distance 0.3m is possible by S.N.(Service Near)function of Focus. (Partial ecliipse may occur during zooming in the S.N. range with using 1/2" camera.)

Optical Back Focal Distance :	14.56mm(In Air)
Flange Back :	17.526mm
Operation :	Focus : Manual Zoom : Manual Iris : Manual
Operating Temperature :	-10～+50℃
Mount :	C-Mount
Filter Size :	46mm P0.75
Size :	φ58×91.7mm
Weight :	Approx.380 g

【COMPOSITION】

Lens・・・・・・・・・・・・・・・・1
Lens Cap・・・・・・・・・・・・・・1
Dust Cap・・・・・・・・・・・・・・1

【DIMENSIONS】

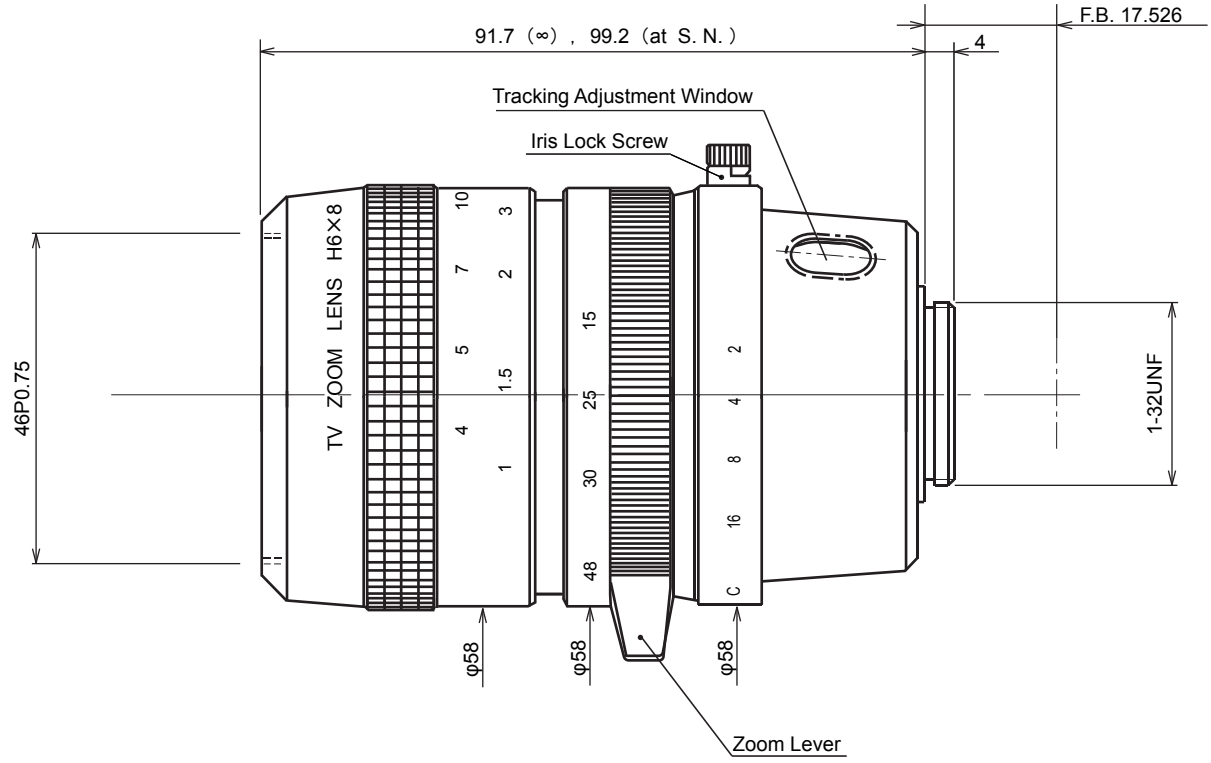

Unit:mm

SUBJECT TO CHANGE WITHOUT NOTICE.